WHITEPAPER

The Journey to Become an Agile 5G CSP

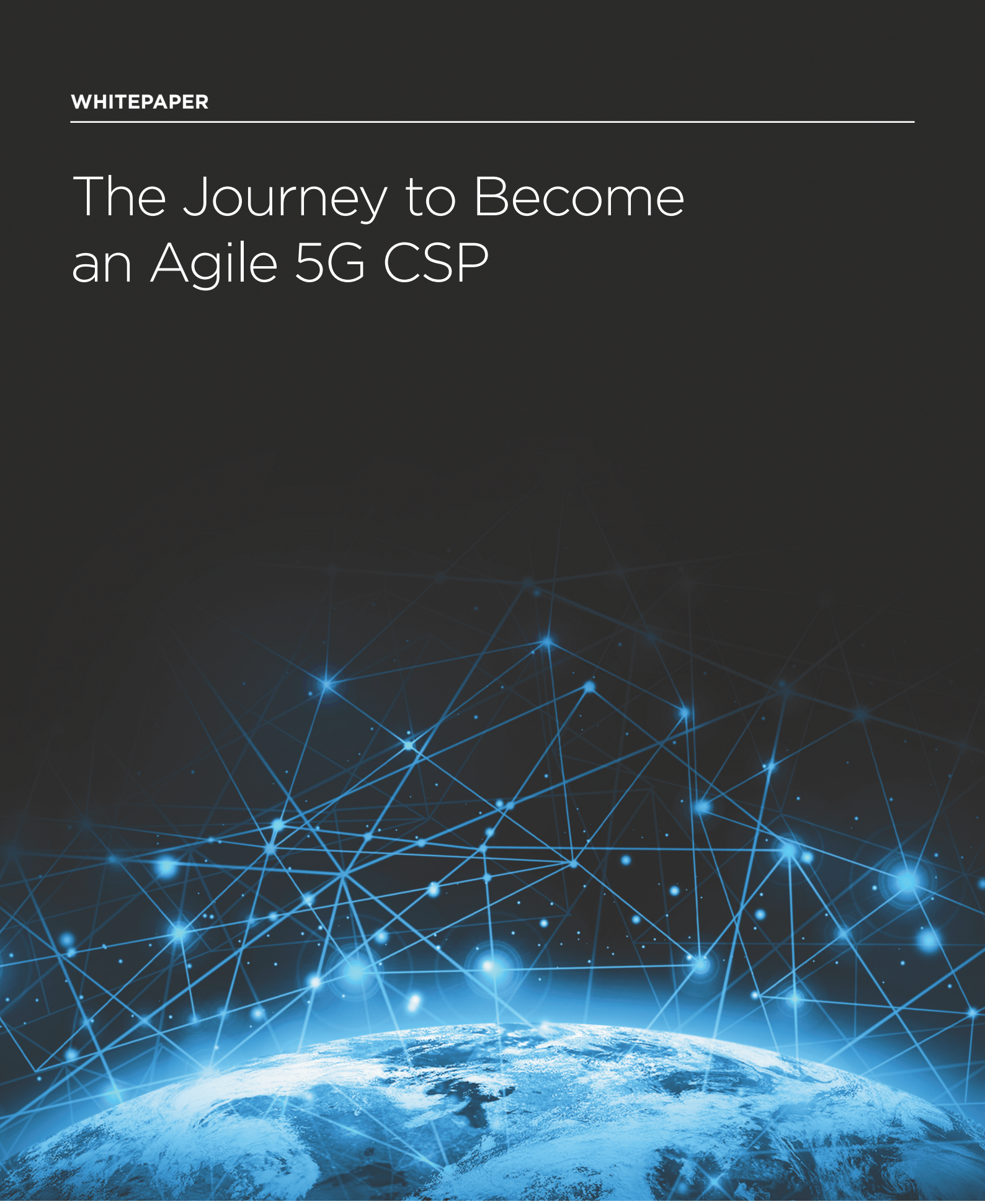

Hewlett Packard Enterprise

Published by
MOBILE WORLD LIVE

Executive Summary

The advent of 5G will radically change mobile networks with significant improvements in bandwidth, latency, data rates and the amount and variety of devices to be supported on the network. New 5G capabilities will enable communication service providers (CSPs) to address a wide range of vertical markets by offering new and enhanced services. Since 5G standards, services and business models are not yet determined, how can CSPs prepare for an uncertain future and be ready to design, deploy and support services that may not even have been dreamed up yet?

To capitalize on the 5G opportunity, CSPs will need to continue their digital transformation journey and become more agile in every aspect of their business. This CSP transformation to become more agile for 5G must cover three key components, which are the three pillars of agility transformation:

1. **Network Agility through Infrastructure Transformation:** Creating a flexible and open infrastructure will foster competition and innovation from a broader vendor ecosystem and enable the development and deployment of new revenue generating services.

2. **Service Agility through OSS Transformation:** Operations support systems (OSS) need to evolve to enable rapid and dynamic service creation, provisioning, activation, and retirement of services. Faster time to market for new services enables the CSP to react more quickly to market and competitive pressures and accelerates time to revenue.

3. **Customer Agility through BSS Transformation:** Business support systems (BSS) will need to support an end-to-end, customer-centric approach that ensures subscribers get what they want, when they want it, and even before they realize they want it through the use of predictive analytics.

To maximize overall agility, CSPs need to successfully implement the network and IT transformations in each of these three pillars. The goal is to become Digital Service Providers (DSP) where they can rapidly create and deploy new dynamic services, use customer relationship management (CRM) data and big data analytics to offer new services to targeted subscribers, and then have back office systems efficiently order, provision, activate, bill for and remove the service.

As the 5G era dawns, the pressure on CSPs to become more agile will only increase. This paper explores the important aspects of the Digital Service Provider transformation in terms of the infrastructure, OSS and BSS systems that CSPs need to evolve and transform in order to increase their overall agility and prepare for the delivery of future 5G services.

Introduction

The journey to become a more agile DSP starts with infrastructure transformation. CSPs have already taken the first steps to become more agile by radically transforming their networks through initiatives such as Network Functions Virtualization (NFV) and Software Defined Networking (SDN). This move was initiated due to the competitive pressures from more agile, over-the-top (OTT) providers such as Amazon, Netflix and Google. With continuing pressures from the OTT providers, CSPs know they need to continue to adapt and change in order to stay competitive.

With 5G on the horizon, agility will be an absolute necessity and will require that CSPs continue their transformational journey to become more nimble service providers. New network capabilities promise significant improvements in data transmission rates and latency, a wide variety of innovative revenue-generating services, and more types of subscribers with billions of connected devices. To realize the promise of 5G, CSPs must be agile enough to quickly react to market changes, seize opportunities to launch new services, and remain competitive in a fast-moving market.

While increasing network agility through infrastructure transformations, such as NFV and SDN, is a good start, it is only one phase of this journey. Equally important are IT transformations in OSS and BSS systems that break down legacy, cumbersome silos and enable CSPs to quickly launch new services and adopt a more customer-centric service delivery approach. Without the requisite IT transformations, any network agility gains from NFV or SDN will be limited. Overall CSP agility will be determined by efforts across the three pillars of infrastructure, OSS and BSS transformations.

The following sections explore the three pillars of network and IT transformation that will put today's network operators on the path to becoming agile 5G CSPs in the future.

Increasing Network Agility through Infrastructure Transformation

To achieve greater network agility for 5G, the underlying infrastructure needs to be open, flexible and programmable, have an intelligent distributed edge, and must continue to be reliable as the revenue and reputation of the CSP depends on it. Figure 1 shows how network infrastructure will shift from hierarchical architectures, where network functions are placed along traffic paths, to flatter networks, where functions are optimally placed, distributed to the network edge, and traffic is directed to the best service functions.

Figure 1

From a hierarchical network, where functions are placed along the traffic path

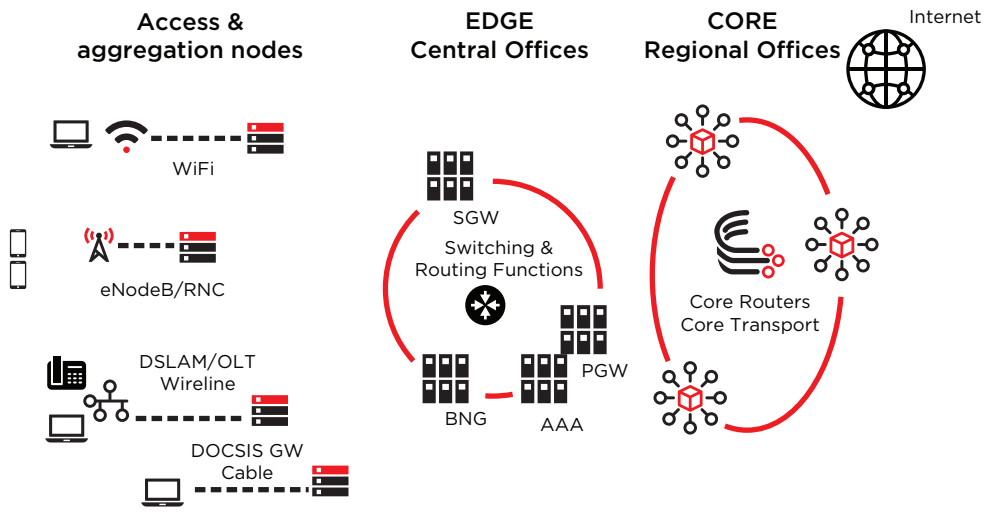

To a flattened network, where functions are optimally placed and traffic is steered towards the most optimally placed service functions

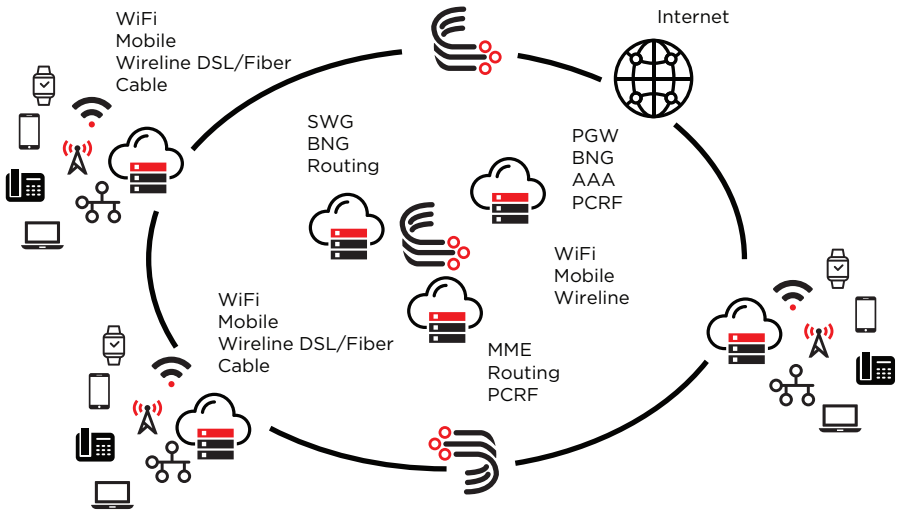

This network transformation is already underway through initiatives including NFV and SDN which enable CSPs to dynamically configure their networks both in the core and at the network edge. 5G network architectures will combine the flexibility and agility of NFV, the programmability of SDN, and real time access to RAN information with location awareness for Multi-access Edge Computing [MEC] applications and other workloads to utilize and offer new services.

The current CSP status quo is not sustainable. CSPs will not be able to increase network agility if they continue to rely on traditional integrated hardware/software solutions from network equipment vendors. A maintenance approach will extend vendor locked-in relationships, increase the cost of specialized software and support, restrict network flexibility and inhibit CSPs' ability to respond quickly to market forces.

The key to increasing network agility for 5G is adopting an open infrastructure to support NFV, SDN as well as MEC applications. Replacing vendor-specific hardware and proprietary software solutions with general purpose, high-volume IT servers will have profound benefits for CSPs including cost savings, operating efficiencies and the ability to spin up new capabilities or capacity in days rather than months. By opening their networks to general purpose hardware, CSPs inspire more innovation through a broader ISV partner ecosystem, and encourage participation from new vendor suppliers beyond the usual network equipment providers (NEPs) and will have far greater flexibility to scale capacity and services with market demand. This change will bring down the cost of network equipment as well as provide more choice and flexibility to select best of breed providers.

As CSPs transform their infrastructure to increase network agility they are evaluating open compute platforms. The reality, however, is that not all general-purpose servers are capable of meeting CSP requirements. CSPs will still require reliable platforms from trusted telco equipment manufacturers because their reputation and revenues depend on it. These telco platforms will need to be optimized to deliver the required performance to run the new virtual network functions (VNFs) without compromising the customer experience. Requirements to select the right server vary from the central office to the intelligent edge to the core data center, based on workload. CSPs consider several important factors when ensuring reliability and performance across NFV Infrastructure:

- **Carrier grade hardware:** As CSPs virtualize and simplify their network, they must maintain highly reliable and available infrastructure in order to guarantee service level agreements (SLAs) and prevent costly outages.
- **NEBS and ETSI certification:** Depending on requirements of the CSP per region, network equipment building system (NEBS) and European Telecommunication Standards Institute (ETSI) certification will still be required along with other CSP specific certifications.
- **Performance optimization:** Servers will need to be optimized to handle the data packet processing performance requirements for the NFV Infrastructure with accelerated data processing techniques such as Data Plane Development Kit (DPDK) and Single Root Input/Output Virtualization (SR-IOV). Other requirements and factors include performance of network interface cards (NICs) on these servers at both a bare metal and VNF application level.

With this new NFV Infrastructure comes support for a range of operating systems, hypervisors, cloud computing platforms, and virtual network functions. Since these software components will likely be sourced from a variety of software vendors, it will also be important to make sure these software stack solutions are optimized to deliver the required performance and quality of service. Selecting telecom equipment providers who invest in these types of optimization and testing services will enable a faster network transformation with the network agility needed to foster new services from the core out to the distributed network edge compute cloud.

Maximizing Service Agility through OSS Transformation

Agile infrastructure can have little impact without agile operations systems. Legacy OSS, which are often highly manual processes, applied to NFV and SDN foundations isn't practical and won't allow full agility of the resources. In order to gain access to the benefits of infrastructure agility, a parallel transformation to improve OSS agility is also required. The foundation for an OSS transformation is the use of a common model for data, relationships, and behavior of objects across both the physical network functions (PNFs) and virtual network functions (VNFs). A common model is needed because most CSPs will continue to have a hybrid infrastructure comprising legacy PNFs along with new VNFs as they expand their NFV and SDN deployments. A key part of the OSS transformation to increase service agility is the NFV reference architecture including the Management and Orchestration (MANO) framework. While the ETSI NFV MANO reference architecture does not cover scenarios of service creation and management across a hybrid network, it does provide a model for agile service creation on virtualized infrastructure that could be replicated to cover both virtualized and physical infrastructure. This forms the basis for introducing a closed-loop automation between the two processes and is the foundation for agile service creation in an NFV environment. The key here is for CSPs to continue with the transformation because the faster they can move off legacy equipment and start to fully utilize their VNF operations, the greater service agility they will achieve.

It is clear the legacy OSS model is not designed for the fast pace of today's OTT services market and especially not for 5G. This is why CSPs are now currently evaluating the best way to transform their legacy OSS to enable a "fast-fail" methodology similar to what OTT providers use today. This methodology consists of rapid prototyping of alpha services, which then are run in beta trials with selected customer bases. Depending on failures and first subscriber feedback, the services are changed and adapted on the fly. Then, if all goes well and these services are stable and profitable enough, they are brought into mass production. This new approach to service design will be prevalent particularly for dynamic services. Dynamic customer services are highly customized and often configured on a per-user basis. They change continuously and run over heterogeneous network infrastructures on PNF and VNF. Typical examples include virtualized customer premises equipment (vCPE), enterprise VPNs or customized broadband and/or content bundled service packages.

An example of this dynamic services model for OSS transformation is the one Hewlett Packard Enterprise uses with its customers, called Dynamic Service Descriptors (DSD). This new "dynamic descriptor" approach gets rid of the classic workflow-driven orchestration, in which the service behavior is hard-coded into the workflows. Instead, it uses a declarative language to describe the service, its relationships, and behavior (policies). The engine takes these service descriptors, looks at the current state or configuration of the service, and will build a runbook at run-time to achieve the desired state. The descriptor is able to model any service or resource. Therefore, it can be used to control resources that are not immediately involved in a service as well, such as core infrastructure. The service descriptors are able to describe how the service should behave in an exceptional scenario, for example, a component failure. This opens the door to self-healing — the OSS listens to the network health and reconfigures it to circumvent problems. This model is a great example of how CSPs can increase service agility and prepare for 5G.

HPE's DSD model allows projects to adopt a fast-fail methodology. Agile teams consisting of Product Managers, Service Designers, OSS engineers, and Infrastructure Experts work in sprints to develop the product offerings, the underlying service model, the relationships, and the behavior of each modeled component, as well as their integration to the network functions. The object-oriented nature of DSDs provide the ability to inherit or compose individual service models for rapid reuse. Continuous Integration/Continuous Development cycles allow for nightly builds of the service orchestration, their immediate testing with the environment and validation of stakeholder expectations. Based on initial experience from deployments, this new technology will lead to improvements in time-to-market. Table 1 provides a summary of the potential time-to-market improvements by implementing this approach.

Table 1: Improvement potential when using a descriptor policy approach

	Classic	DSD
Service onboarding	Months	Weeks
Dynamic service chain creation	Months	Hours
Instantiation of complex services covering multiple service building blocks	Weeks	Minutes
Service offer migration	>1 year	- 2-3 months

These reductions in service delivery times provide significant benefits for the CSP. These improvements in service delivery times paired with the ability to increase process automation illustrate why OSS transformation is just as important as infrastructure transformation.

Improving Customer Agility through Business Model and BSS Transformation

As CSPs improve network and service agility, it is all with one end goal in mind - exceeding customer expectations. In order to meet and exceed those expectations, CSPs will certainly need more agile resources and improved service delivery. But gains will be limited without realigning to more customer-centric business models and BSS systems which will reliably deliver consistent, seamless, and secure customer experiences. Some of the world's first 5G services will be deployed and experienced at the 2018 Winter Olympics™ in South Korea and the 2020 Summer Olympics™ in Japan. These two Olympic events will be a test of CSPs' customer-centric agility - their ability to deliver and bill for innovative and interactive 5G services. Other CSPs around the world will be watching and learning to see how well the South Korean and Japanese CSPs perform in terms of network agility, service agility, and customer agility.

A customer centric approach will start with a move to a new single consolidated view of the subscribers. By building secure customer profiles CSPs will have the capability to analyze individual preferences, predict customer trends, and deliver personalized offers to improve customer experiences. Virtualizing the Subscriber Data Management (SDM) function is a first step that will enable CSPs to simplify their network topologies and manage their subscribers from a single unified repository. This repository will allow applications to use the same profile instead of repeating profile and authentication for every application. These efficiencies improve user experience while improving efficiencies and supporting customizable service delivery. For these virtualized SDM solutions, quite a few CSPs are requiring vendors to port their virtualized SDM solutions onto general purpose servers instead of the custom ASIC and proprietary solutions of the past. This requirement further enables CSPs to drive cost efficiencies while avoiding vendor lock-in.

Moving beyond subscriber profile repositories, increasing customer centricity will also require improved big data analytics and CRM to improve the performance of other BSS functions. By leveraging big data telco analytics, subscriber preferences and usage can rapidly be analysed, allowing the CSP the opportunity to capitalize on this knowledge and promote new services to these subscribers. Leveraging analytics will be even more important as 5G networks evolve. For example, MEC will be an important component of 5G network architectures and it features the capability to access data on radio access network (RAN) conditions in real-time. Coupled with an analytics engine and automated decision-making, this real-time RAN data can be used to adapt a customer's service in real time to meet quality of service (QoS) agreements or user preferences. By harnessing data from the network and automating decision processes, an agile 5G CSP will be able to improve customer engagement and service quality. Thus, the third and final pillar of agility transformation leverages the flexibility gained through infrastructure transformation, by creating a feedback loop from customer-centric data analytics that informs network provisioning decisions that will enable new or improved services. This interdependence among the three pillars of infrastructure, OSS and BSS transformation is the crux of the CSP transition to becoming more agile in the 5G era.

Conclusion

Increasing agility is one of the biggest drivers of digital transformation for CSPs. To improve overall agility, CSPs must consider all of the factors that affect their ability to introduce new services more quickly, respond rapidly to competitive pressures in the market, deliver compelling customer experiences and achieve faster time to revenue. Those factors necessitate network and IT transformations across the entire CSP business. Overall agility can be increased by successfully addressing the three pillars of agility transformation:

- Infrastructure transformation to support a cloud based, software defined infrastructure increases **network agility**
- OSS transformation with high degree of automation boosts **service agility**
- BSS transformation and the power of analytics maximizes **customer agility**

Each of these transformations is individually significant, but together they will power Digital Service Providers to capture the full benefit of 5G. Enterprises will be able to monitor inventory in new ways, change user access rights instantly and leverage Internet of Things. Consumers will enjoy more interactive experiences, access improved remote health services, and enjoy more simplified service authentication. With network agility, service agility and customer agility in tow, Digital Service Providers will accelerate digital life experiences.

Hewlett Packard Enterprise

About HPE

Hewlett Packard Enterprise helps CSPs transform the way they do business and grow in a fast-changing market – to become Digital Service Providers. To meet the demand for faster, more efficient delivery of new services and streamline operations, CSPs are adopting IT and cloud technologies and methodologies to transform their network and operations. Through its portfolio of Telco-focused solutions and services, HPE helps CSPs increase network agility, enhance operations efficiency, and leverage customer insights to successfully pursue new opportunities and embrace new business models.

HPE uniquely brings together 30+ years of leadership in IT and cloud, extensive experience with Telco customers and deployments, and a portfolio of open solutions that leverage standards leadership and industry-wide vendor and customer partnerships to help CSPs accelerate their journey to the New Business of the Network

Learn more at hpe.com/dsp/infrastructure and follow @hpe_csp.

MOBILE WORLD LIVE

Produced by the mobile industry for the mobile industry, Mobile World Live is the leading multimedia resource that keeps mobile professionals on top of the news and issues shaping the market. It offers daily breaking news from around the globe. Exclusive video interviews with business leaders and event reports provide comprehensive insight into the latest developments and key issues. All enhanced by incisive analysis from our team of expert commentators. Our responsive website design ensures the best reading experience on any device so readers can keep up-to-date wherever they are.

We also publish five regular eNewsletters to keep the mobile industry up-to-speed: The Mobile World Live Daily, plus weekly newsletters on Mobile Apps, Asia, Mobile Devices and Mobile Money.

What's more, Mobile World Live produces webinars, the Show Daily publications for all GSMA events and Mobile World Live TV – the award-winning broadcast service of Mobile World Congress and exclusive home to all GSMA event keynote presentations.

Find out more www.mobileworldlive.com